Hydro-dynamic characteristics of an underwater towed body using CFD analysis

Yuki Takahashi*, Yasuzumi Fujimori**
Kawilarang Warouw Alex Masengi***, Kazuhiko Itaya**** and Nobuo Kimura**

* Graduate School of Fisheries Sciences, Hokkaido University, Japan
** Faculty of Fisheries Sciences, Hokkaido University, Japan
*** Faculty of Fisheries and Marine Science,
Sam Ratulamngi University, Indonesia
****Hokkaido Research Organization Fisheries Research Department

Abstract

Towed body was improved by using CFD analysis. The analysis was conducted by using original model, improved model, and improved model with acoustic transducer. Upper part of the protection of improved model was changed to flat plate (length: *d*, angle: θ), and lower part was quarter round (radius: *r*). The effect of eddy on hydro-dynamic characteristics was larger than that of the shape of the towed body in itself. The model with θ=45°, *d*=0.50 m, *r*=0.18 m was regarded as the best model.

Key words: CFD, Towed body, Hydro-dynamic

1. Introduction

The towed body is used variously in broad areas of oceanographic observation [1]. The design of towed body is specific every use and maker. Actually, there is few report of hydro-dynamic characteristics of towed body. To decide the design of towed body, model experiment is conducted generally to investigate the hydro-dynamic characteristics. However, it requires the many time and large cost to examine for many combination of design factor. Recently, Computational Fluid Dynamics (CFD) analysis

has become popular to conduct such a kind of study that needs a reception of experiment in different design [2,3]. CFD analysis is the numerical method and is carried out to solve a hydrodynamic equation. In late years the precision of this method improves markedly with the development of the computer.

In this study, CFD analysis was tried to investigate the hydro-dynamic characteristics of a towed body which is used for a towed echo-sounder. Additionally, the improved model was proposed.

2. Method

2.1 Towed body

Towed body targeted in this paper is used as towed echo-sounder with transducer (TD). The picture and dimension of the body is shown in Fig.1. The rounded protection is attached in the front to protect TD. Total length of the body is 1.52 m, and the width of the protection is 0.36 m. This protection would be main factor of hydro-dynamic characteristics of this body.

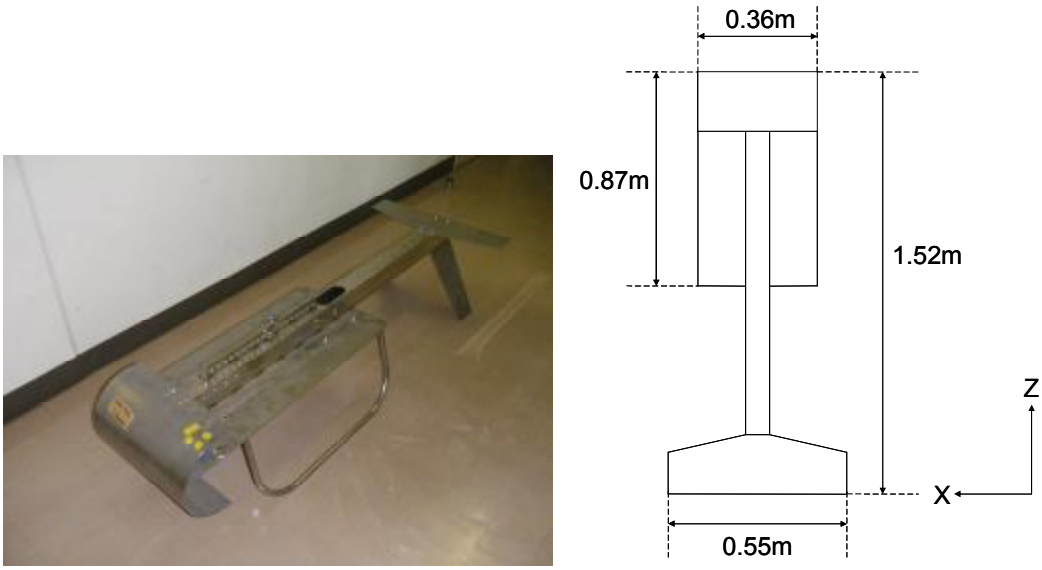

Fig. 1 Picture and dimension of the towed body

2.2 Method of analysis

2.2.1 Condition of calculation

The fluid analysis software ANSYS (CYBERNET Inc.) is used for the calculation of lift and drag force, and visualization of streamline. This software solves Navier-Stokes equation using finite elemental method (FEM). In the calculation, tetrahedral mesh is used. Number of the elements is about 500000. Mesh around the towed body is shown in Fig.2. Computational area is cube of 7.0m on a side, and towed body model is positioned at the center of cube (Fig.3). The current velocities at the inlet are set as the uniform flow with 4.0, 6.0, 8.0 knot in the z- direction. The value of the relative pressure at the outlet and the opening are set as 0.0 Pa. The current velocities at the towed body surface are 0.0 m/s in the condition of no slip. The SST (Shear Stress Transport) model is employed as the turbulent flow model and kind of fluid is set as water. On the computational condition, the water density is 997 kg/m^{-3}, temperature is 25℃, viscosity is 8.899×10^{-4} kg/ms, and kinematic viscosity is 0.893 m^2/s.

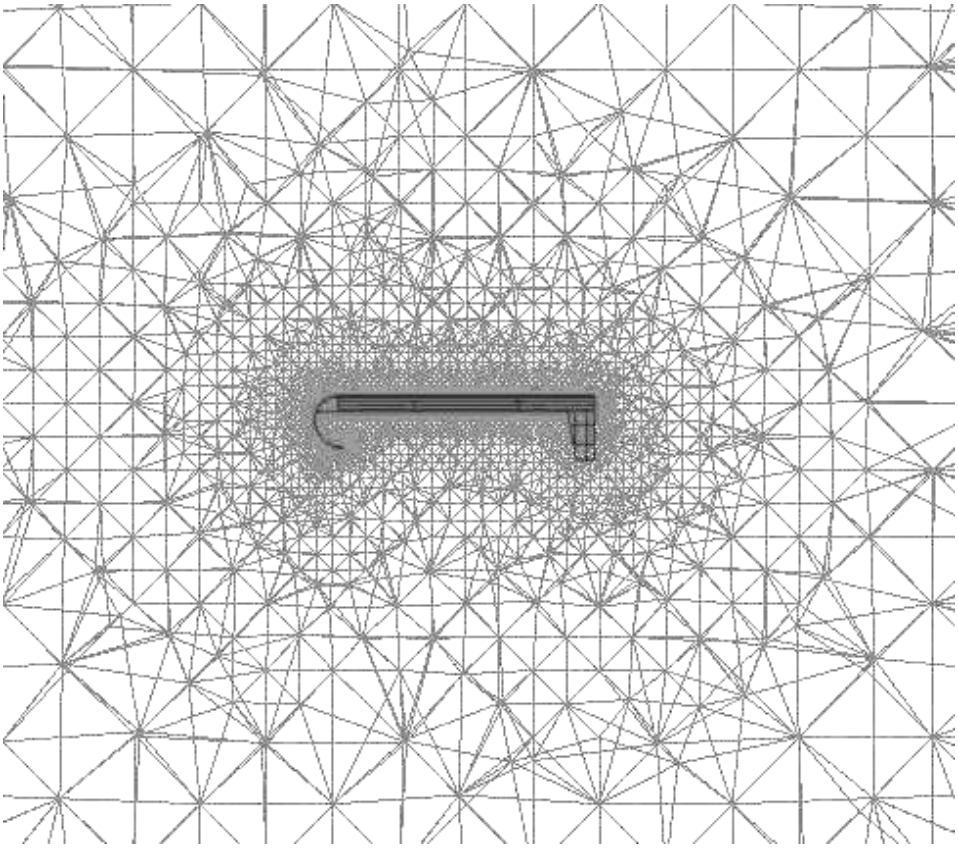

Fig.2 Mesh around the towed body

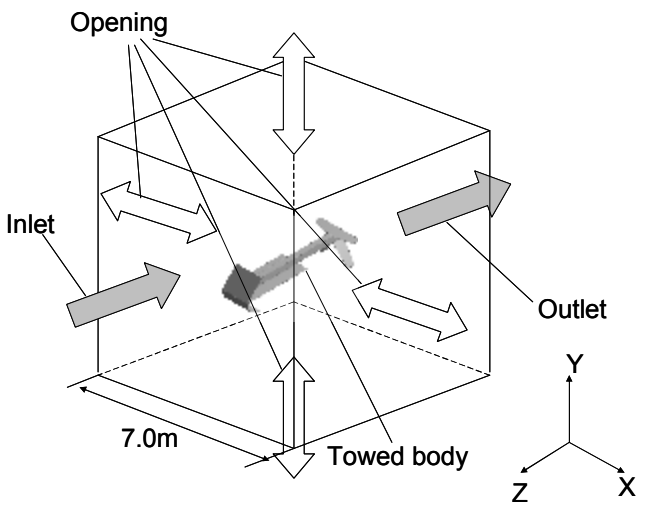

Fig.3 Computational area

2.2.2 Method of calculation

Finite elemental method (FEM) It is difficult to derive the motion equation when the case of that the target of analysis is structure.

Consequently, we use finite element method (FEM) in this study. In this method, the target is divided into finite number of element and node. Then, each element is solved as a set of motion equations to predict the behavior of the structure.

Fundamental equation Considering the law of conservation of mass, and supposed an incompressible flow of a Newtonian fluid, density ρ is constant. Then, the continuity equation is derived as follows [4,5]:

$$\frac{\partial u}{\partial x}+\frac{\partial v}{\partial y}+\frac{\partial w}{\partial z}=0 \tag{1}$$

Here, u, v, w are flow velocities in x, y, z coordinates. Following equations are derived from law of the conservation of momentum and Newton's equation of motion, $F=ma$.

$$\rho\frac{Du}{Dt}=\rho\left(\frac{\partial u}{\partial t}+u\frac{\partial u}{\partial x}+v\frac{\partial u}{\partial y}+w\frac{\partial u}{\partial z}\right)=\rho F_x-\frac{\partial p}{\partial x}+\upsilon\left(\frac{\partial^2 u}{\partial x^2}+\frac{\partial^2 u}{\partial y^2}+\frac{\partial^2 u}{\partial z^2}\right)$$

$$\rho\frac{Dv}{Dt}=\rho\left(\frac{\partial v}{\partial t}+u\frac{\partial v}{\partial x}+v\frac{\partial v}{\partial y}+w\frac{\partial v}{\partial z}\right)=\rho F_y-\frac{\partial p}{\partial y}+\upsilon\left(\frac{\partial^2 v}{\partial x^2}+\frac{\partial^2 v}{\partial y^2}+\frac{\partial^2 v}{\partial z^2}\right) \tag{2}$$

$$\rho\frac{Dw}{Dt}=\rho\left(\frac{\partial w}{\partial t}+u\frac{\partial w}{\partial x}+v\frac{\partial w}{\partial y}+w\frac{\partial w}{\partial z}\right)=\rho F_z-\frac{\partial p}{\partial z}+\upsilon\left(\frac{\partial^2 w}{\partial x^2}+\frac{\partial^2 w}{\partial y^2}+\frac{\partial^2 w}{\partial z^2}\right)$$

Here, ρ is density, p is pressure, and υ is kinematic viscosity. Equation (2) is rewritten as following equation. This equation is called as Navier-Stokes equation.

$$\begin{aligned}
\frac{Du}{Dt} &= \frac{\partial u}{\partial t} + u\frac{\partial u}{\partial x} + v\frac{\partial u}{\partial y} + w\frac{\partial u}{\partial z} = -\frac{1}{\rho}\frac{\partial u}{\partial x} + \upsilon\nabla^2 u + F_x \\
\frac{Dv}{Dt} &= \frac{\partial v}{\partial t} + u\frac{\partial v}{\partial x} + v\frac{\partial v}{\partial y} + w\frac{\partial v}{\partial z} = -\frac{1}{\rho}\frac{\partial v}{\partial y} + \upsilon\nabla^2 v + F_y \\
\frac{Dw}{Dt} &= \frac{\partial w}{\partial t} + u\frac{\partial w}{\partial x} + v\frac{\partial w}{\partial y} + w\frac{\partial w}{\partial z} = -\frac{1}{\rho}\frac{\partial w}{\partial z} + \upsilon\nabla^2 w + F_z
\end{aligned} \tag{3}$$

Where, μ is static coefficient of viscosity. Each term of middle part of equation (3) is called as momentum term, advective term, and each term of right part is called as pressure term, viscous term, and force term, respectively.

Here,

$$\upsilon = \frac{\mu}{\rho} \tag{4}$$

$$\nabla^2 = \frac{\partial^2}{\partial x^2} + \frac{\partial^2}{\partial y^2} + \frac{\partial^2}{\partial z^2} \tag{5}$$

2.2.3 Numerical analysis

Lift coefficient (C_L), drag coefficient (C_D) and lift-drag ratio (C_L/C_D) are calculated by following equation.

$$\text{Lift coefficient: } C_L = \frac{L}{0.5\rho S V^2} \tag{6}$$

$$\text{Drag coefficient: } C_D = \frac{D}{0.5\rho S V^2} \tag{7}$$

$$\text{Lift-drag ratio: } \frac{C_L}{C_D} = \frac{L}{D} \tag{8}$$

Here, L is lift force, D is drag force, ρ is density of fluid, V is velocity of fluid, and S is cross section area of towed body. In this study, we indicate the value of lift-drag ratio in absolute value, and we use lift-drag ratio as an improvement criterion.

2.3 Models

The analysis is conducted by using original model, improved model, and improved model with TD.

The improvement is examined to redesign the front protection. Proposed model is shown in Fig.4. Upper part of the protection is changed to flat plate, and lower part is quarter round. The angle between flat plate and towed body θ(°), the length of flat plate d(m), and radius of quarter round r(m) are the factors to improve the model.

The improved model with TD is also examined to know influence of the turbulence by mounting TD. This model is shown in Fig.5.

For all of model, the lift and drag force and these coefficients, lift-drag ratio were estimated. Moreover, the streamline around the towed body is estimated to investigate visually the hydro-dynamics characteristics.

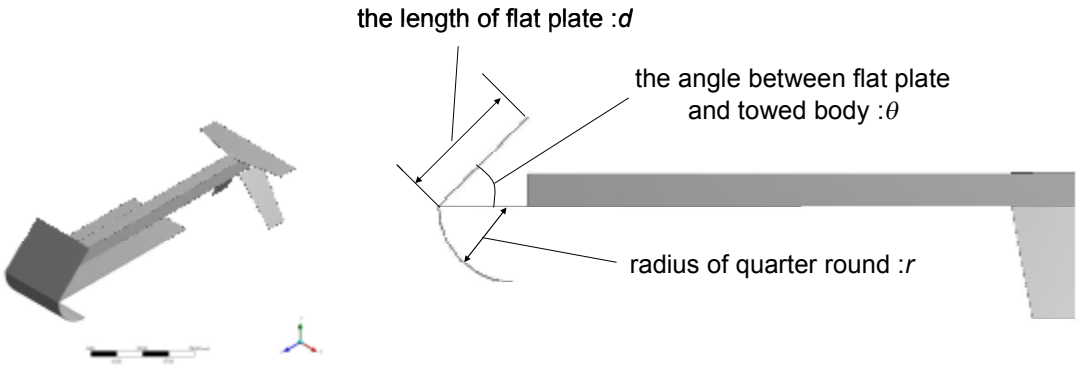

Fig.4 Proposed improved model

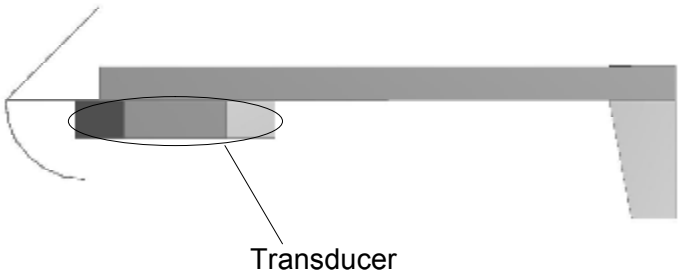

Fig.5 Improved model with TD

3. Results

3.1 Original model

Estimated lift, drag force, and calculated lift, drag coefficient and lift-drag ratio were shown in Table1. Lift and drag force were proportional to velocity. In contrast, lift, drag coefficient and lift-drag ratio were shown little change. When velocity was 4.0 knot, lift-drag ratio was 0.177. Streamline around the towed body was shown in Fig.6. Eddy was observed near the protection.

3.2 Improved model

The radius of quarter round (r) is set as 0.18 m, the angle between flat plate and towed body (θ) was set as 25, 35, 45, 50°, and the length of flat plate (d) was set as 0.10, 0.15, 0.20, 0.25, 0.30, 0.35, 0.40, 0.50 m. The relationship between lift-drag ratio and the length of flat plate (d) was shown in Fig.7. Lift-drag ratio was increased considerably when the length of flat plate (d) was 0.25 or 0.35 m. When the value of d exceeded 0.25 or 0.35 m, lift-drag ratio was shown little change. In this result, the maximum lift-drag ratio was 0.340 (θ=45°, d=0.50 m).

In the next, the angle between flat plate and towed body (θ) is fixed as 45°, and the length of flat plate (d) was set as 0.30, 0.40 m. The radius of quarter round (r) was set as 0.11, 0.13, 0.15, 0.17, 0.18, 0.19, 0.21 m. The relationship between the lift-drag ratio and the radius of quarter round (r) was shown in Fig.8. Lift-drag ratio of the models when r=0.40 m was larger than that of the models when r=0.30 m. The maximum lift-drag ratio was 0.227 (r=0.19 m) when r=0.30 m, and the maximum lift-drag ratio was 0.330 (r=0.15 m) when r=0.40 m.

Streamline around the improved models was shown in Fig.9. Conditions of the model of Fig.9 (1) are θ=45°, d=0.25 m, r=0.18 m (C_L/C_D=0.106), and Fig.9 (2) are θ=45°, d=0.30 m, r=0.18 m (C_L/C_D=0.220). In both models, the eddy was observed near the protection. However, the eddy observed in Fig.9 (2) was larger than that observed in Fig.9 (1).

3.3 Improved model with TD

In this model, the radius of quarter round (r) was set as 0.18 m, and the angle between flat plate and towed body (θ) was set as 25, 35, 45°. The length of flat plate (d) was set as 0.30, 0.40 m. Transducer (TD) was attached in each model. Relationship between

lift-drag ratio and the length of flat plate (*d*) was shown in Fig.10. The lift-drag ratios of the models with TD when the condition was θ=45° were as large as that of the models without TD. In the other conditions, the lift-drag ratios of the models with TD were larger than that of the models without TD.

The streamline around the towed body in the models with TD and without TD were compared in Fig.11 (1), (2). The condition of the models in Fig.11 are *d*=0.30 m, θ=35°. The eddy observed in Fig.11 (1) was larger than that observed in Fig.11 (2).

Table1 The estimated result of original model

Velocity (knot)	Lift force (N)	Drag force (N)	Lift-drag ratio	Lift coefficient	Drag coefficient
4	-19.595	110.599	0.177	-0.0920	0.520
6	-43.941	248.181	0.177	-0.0917	0.518
8	-77.961	440.432	0.177	-0.0916	0.517

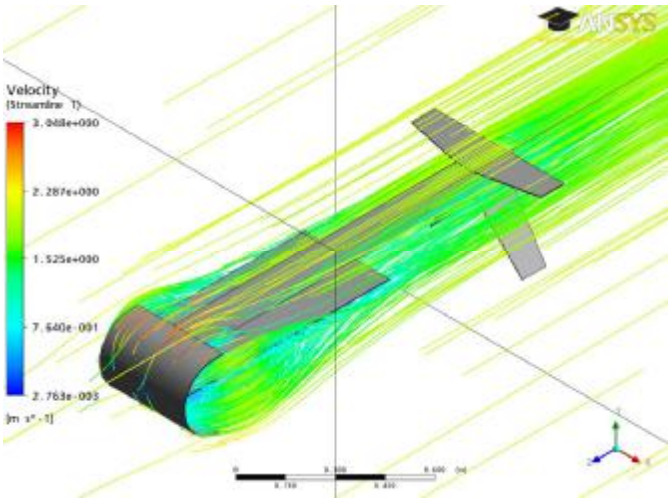

Fig.6 Streamline around the original model

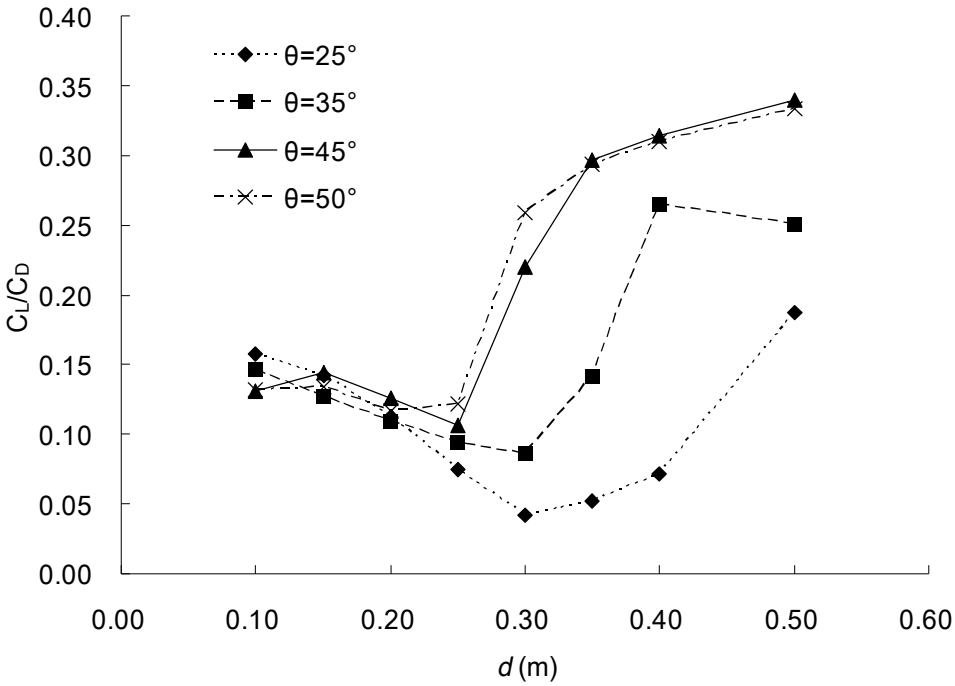

Fig.7 Lift-drag ratio of the improved model (r=0.18 m)

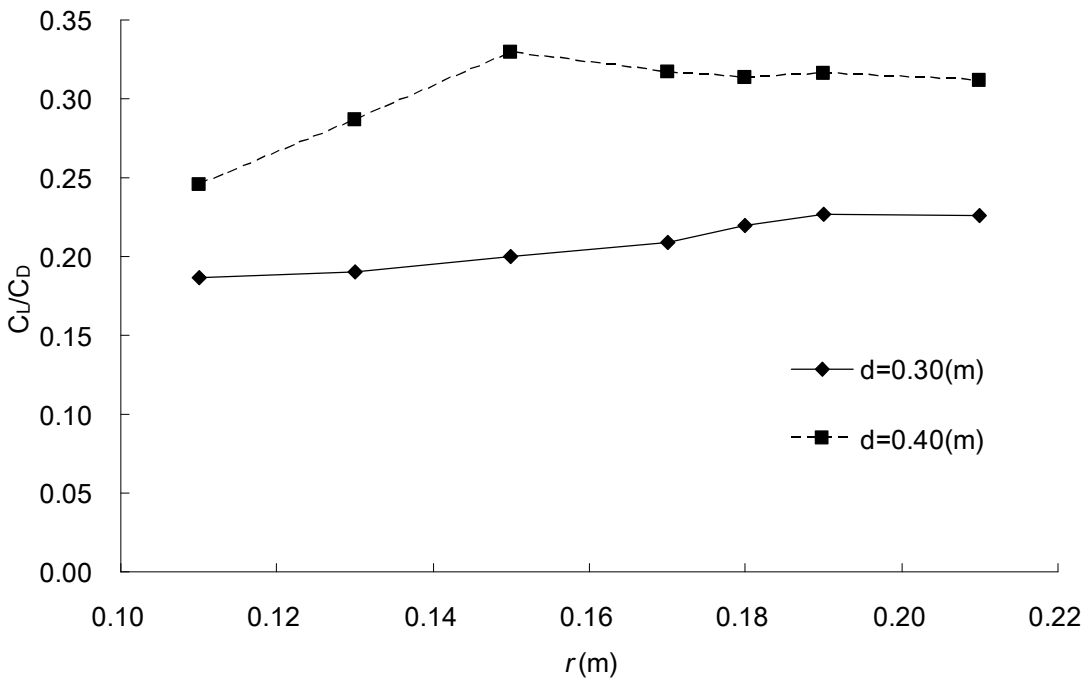

Fig.8 Lift-drag ratio of the improved model (θ=45°)

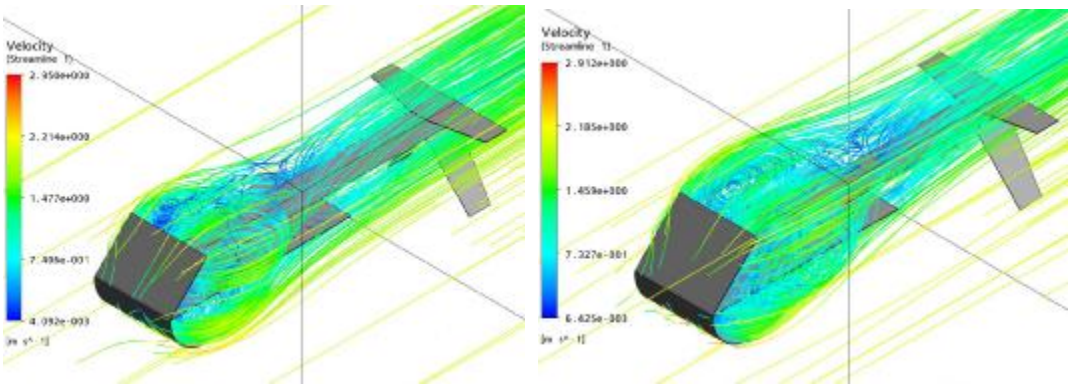

(1) (2)

Fig.9 Streamline around the improved model

(1) θ=45°, d=0.25 m, r=0.18 m, (2) θ=45°, d=0.30 m, r=0.18 m

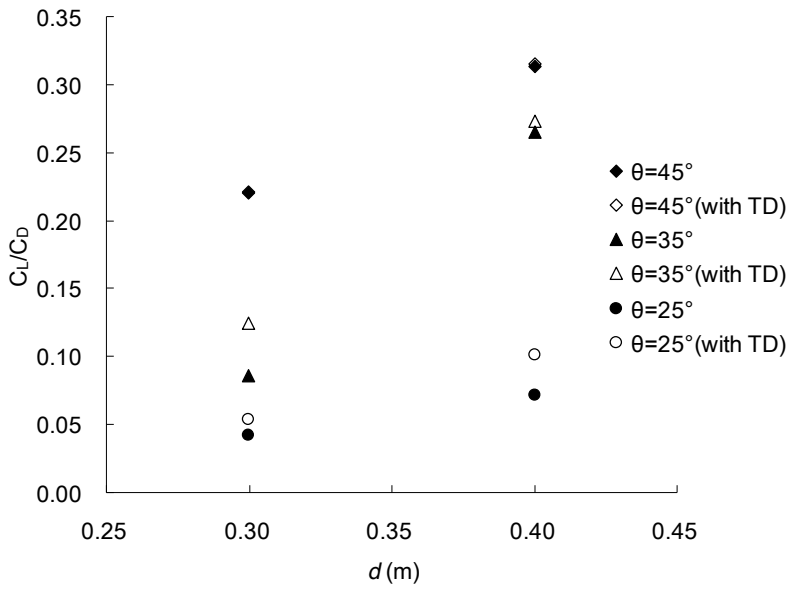

Fig.10 Lift-drag ratio of the improved model with TD

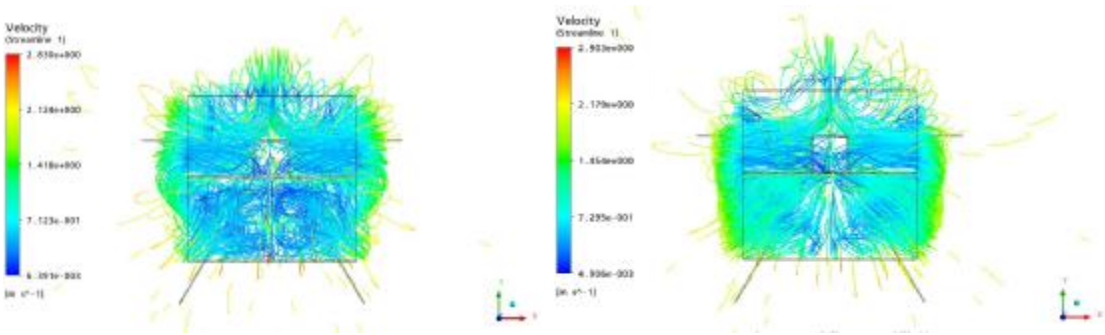

(1) (2)

Fig.11 Streamline around the improved model

(1) θ=35°, d=0.30 m, r=0.18 m (with TD), (2) θ=35°, d=0.30 m, r=0.18 m (without TD)

4. Conclusion

In this study, some improved model has large lift-drag ratio. The original model was inefficient in hydro-dynamic characteristics. Lift-drag ratio was increased remarkably when the length of flat plate (*d*) was 0.25 or 0.35 m. This implies the length of flat plate has a significant effect on the hydro-dynamic characteristics. In addition, the eddy was increased when the lift-drag ratio was large (Fig.9). It is considered that the effect of eddy on hydro-dynamic characteristics is larger than that of the shape of the towed body in itself.

The peak was observed in the lift-drag ratio of improved model (Fig.7, 8). Lift force was increased by increasing cross section. However, increase in cross section also increased drag force. As the result, the lift-drag ratio was decreased.

Lift-drag ratio was changed by attaching transducer (TD). This means the existence of TD affects surrounding stream. Therefore, the attached position of TD should be considered when the towed body is designed.

The condition at the maximum lift-drag ratio in all models is θ=45°, d=0.50 m, r=0.18 m (C_L/C_D=0.340). Therefore, in this study, this model is regarded as the best model.

5. References

[1] Arata KANEKO, Noriaki GOHDA, Wataru KOTERAYAMA, Masahiko NAKAMURA, Shinjiro MIZUNO, Hirahito FURUKAWA: Towed ADCP Fish with Depth and Roll Controllable Wings and Application to the Kuroshio Observation, Journal of Oceanography, 49, 383-395, 1993.

[2] Dimitri Nicolopoulos, Eric Berton, Guillaume Gouvernet, Andre Jacques: A hybrid numerical method to develop America's Cup yacht appendages, Sports Eng(2009) 11:177-185, 21 July 2009, © International Sports Engineering Association 2009.

[3] Tsutomu TAKAGI, Application of CFD Analysis to Fisheries Science, Mathematical and Physical Fisheries Science vol.1, August 2003, 77-80.

[4] Youichirou Matsumoto, Hiroki Yamaguchi: Hydrodynamics as the tools, 1 August 2005, NIPPON JITHUGYO PUBLISHING.

[5] CAD/CAE society, ANSYS engineering analysis introduction, Rikogakusha Publishing, April 2001.

Received September 14, 2010

Accepted November 26, 2010

Academic backgrounds

Yuki Takahashi

04/2006 – 03/2010	Faculty of Fisheries Hokkaido University, Japan
04/2010 –	Master's course of Graduate School of Fisheries Hokkaido University, Japan

Research field: Hydro-dynamic characteristics of an underwater towed body using CFD analysis

Yasuzumi Fujimori

04/1994 – 03/2005	Assistant Professor, Hokkaido University, Japan
04/2005 – 04/2010	Associate Professor, Hokkaido University, Japan
05/2010 –	Professor, Hokkaido University, Japan

Research field: Fishery process and the selectivity of fishing implements

Kawilarang Warouw Alex Masengi

11/1985 – 10/1986	Lecturer, Faculty of Fisheries and Marine Science, Sam Ratulagi University, Indonesia
10/1986 – 3/1988	Assistant Professor, Faculty of Fisheries and Marine Science, Sam Ratulagi University, Indonesia
3/1993 – 2/2004	Associate Professor, Faculty of Fisheries and Marine Science, Sam Ratulagi University, Indonesia
2/2004 –	Professor, Faculty of Fisheries and Marine Sience, Sam Ratulagi University, Indonesia

Research field: Seakeeping quality of fishing boat, Naval Arciteture

Kazuhiko Itaya

2003 – 2009	Scientific Officer, Hokkaido Central Fisheries Experimental Station
2009 – 2010	Scientific Officer, Wakkanai Fisheries Experimental Station
2010 –	Scientific Officer, Wakkanai Fisheries Research Institute, Hokkaido Research Organization Fisheries Research Department

Research field: Fishereis stock assessment, Sampling gear technology, Acoustic survey

Nobuo Kimura

05/1986 – 03/1991	Assistant Professor, Hokkaido University, Japan
04/1991 – 03/2005	Associate Professor, Hokkaido University, Japan
04/2005 –	Professor, Hokkaido University, Japan

Research field: Seakeeping quality of fishing vessel, Fishing Engineering, Fluid dynamics